REVISION RECORD			
LTR	ECO NO.	APPROVED	DATE

SYSTEM POWER

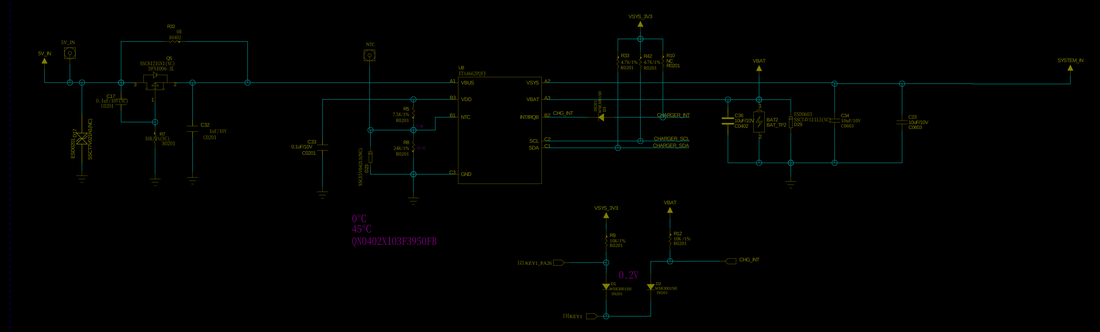

DRAWN	DATED	COMPANY:	ÉÍÛÚÊÐÎ¢¿Ê¿Æ¼¼ÓÐÎÞ¹«Ê¾		
CHECKED	DATED	TITLE:	368_523_V10_20230621		
QUALITY CONTROL	DATED	CODE: <Code>	SIZE: A0	DRAWING NO.	REV: 1.0
RELEASED	DATED	SCALE: <Scale>			SHEET: 1 OF 4